REVISIONS				
ZONE	REV	DESCRIPTION	DATE	APPROVED

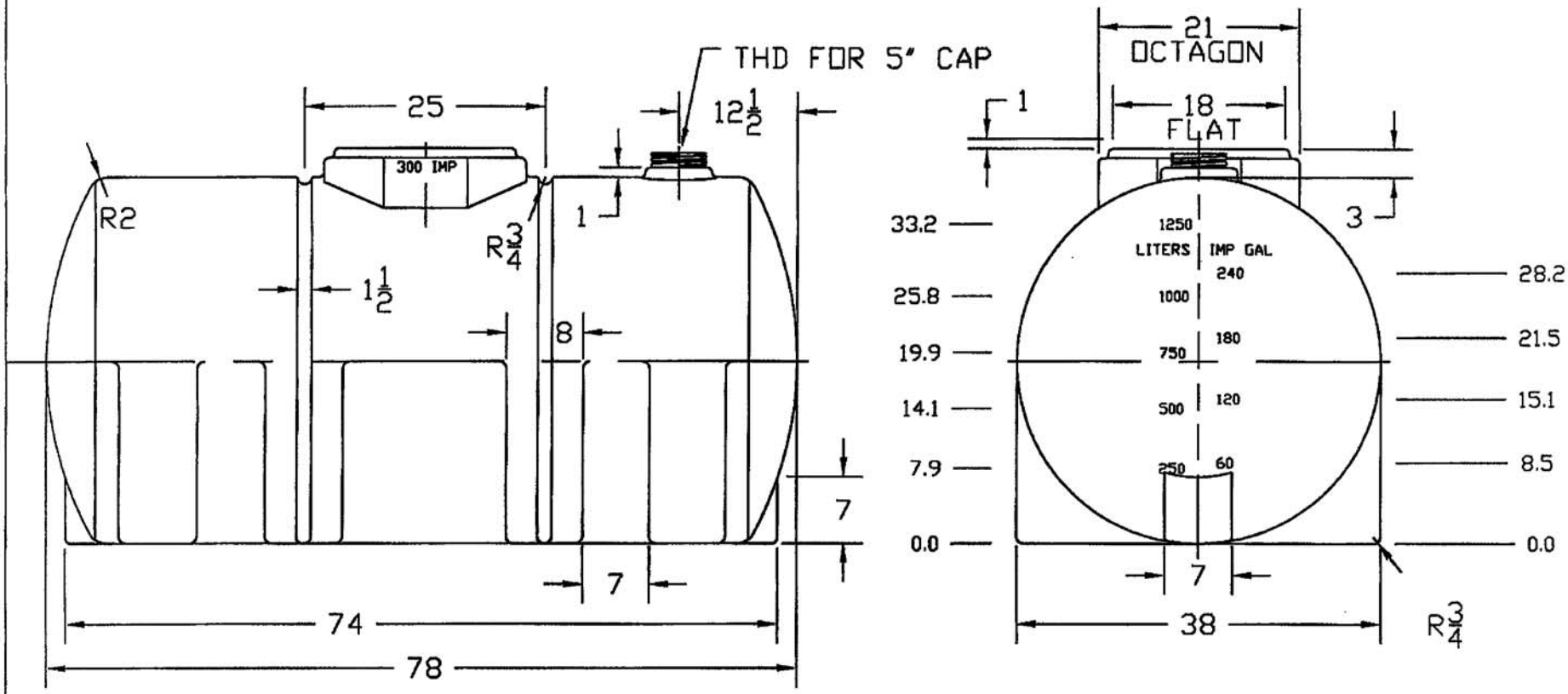

NORWESCO CANADA

300 IMPERIAL GALLON
HORIZONTAL LEG TANK

JTP 13FEB02	SIZE A	FSCM NO.	DWG NO. 41430	REV
	SCALE 1/16		SHEET	